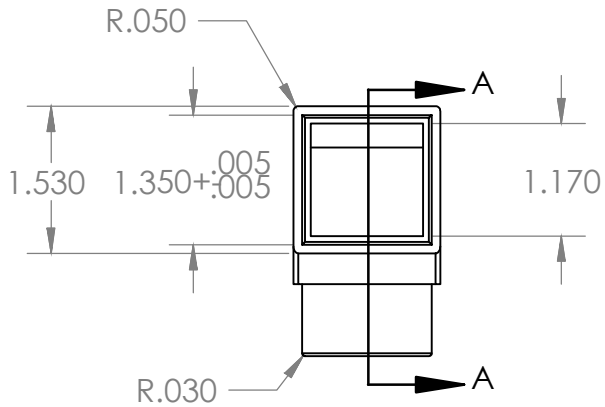

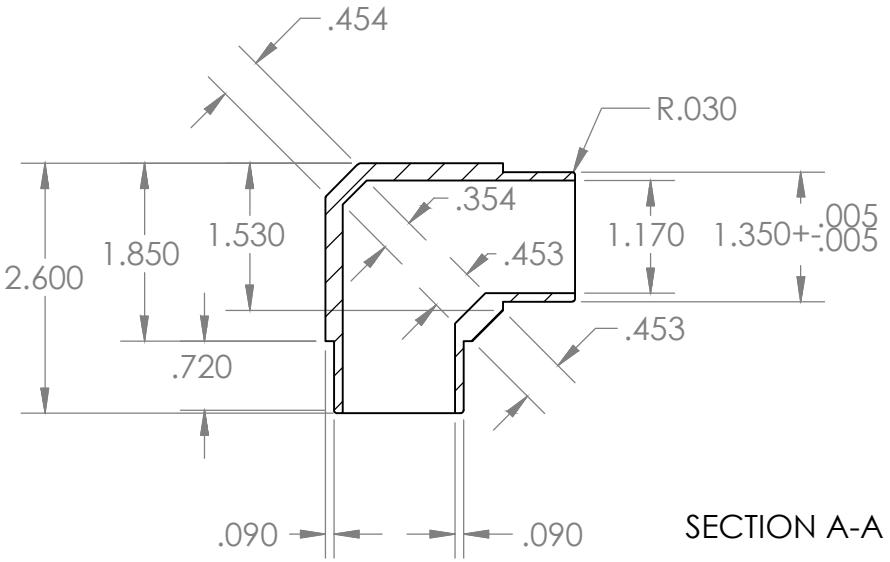

SECTION A-A

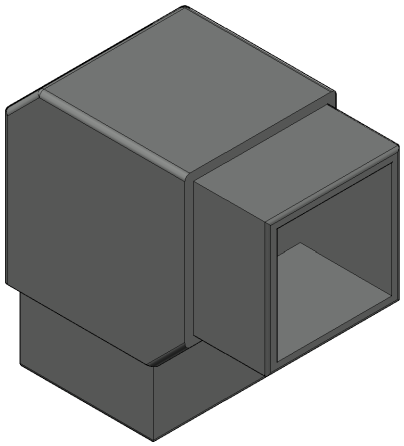

Kegworks	TITLE XX-76961-1.5-SQ Flush Elbow Fitting 90°-1.5" Square		
SIZE A	MATERIAL SATIN BRUSHED BRASS & MATTE BLACK	UNITS INCHES	PN: SATIN BRUSHED BRASS: SB-76961-1.5-SQ MATTE BLACK: BLK-76961-1.5-SQ	REV
SCALE 1:2	**PROPRIETARY AND CONFIDENTIAL:** THE INFORMATION CONTAINED IN THIS DRAWING IS THE SOLE PROPERTY OF KEGWORKS. ANY REPRODUCTION IN PART OR AS A WHOLE WITHOUT THE WRITTEN PERMISSION OF KEGWORKS IS PROHIBITED		SHEET 1 OF 1