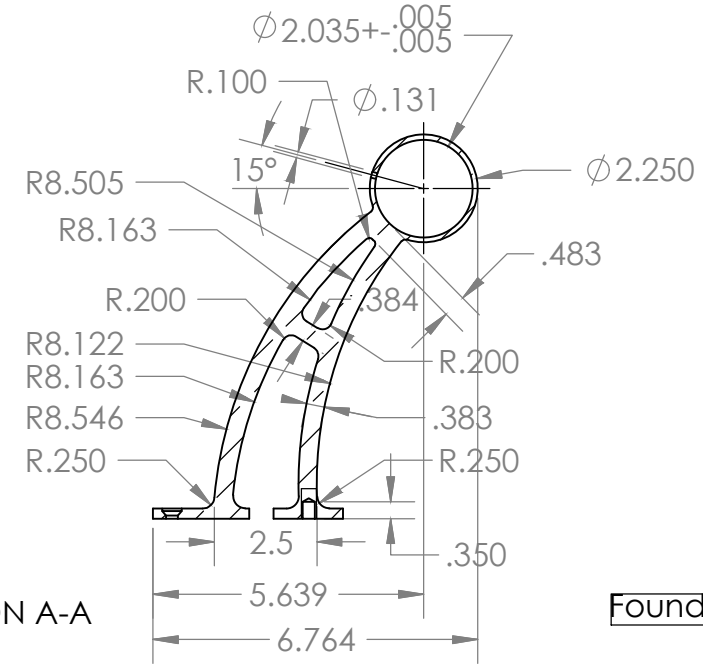

SECTION A-A

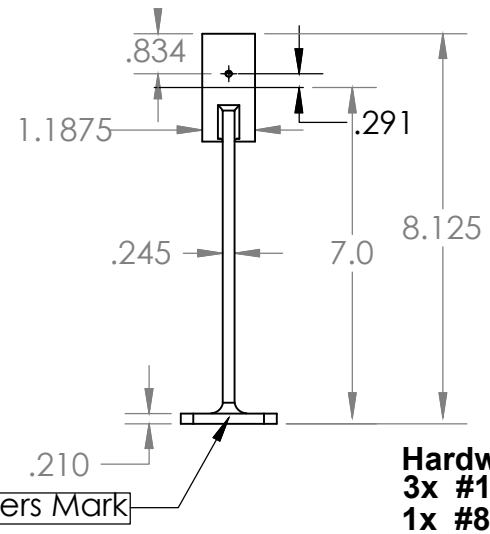

Hardware:
3x #10 1-1/2" Mounting Screws
1x #8 3/4" Self-Drilling Set Screw

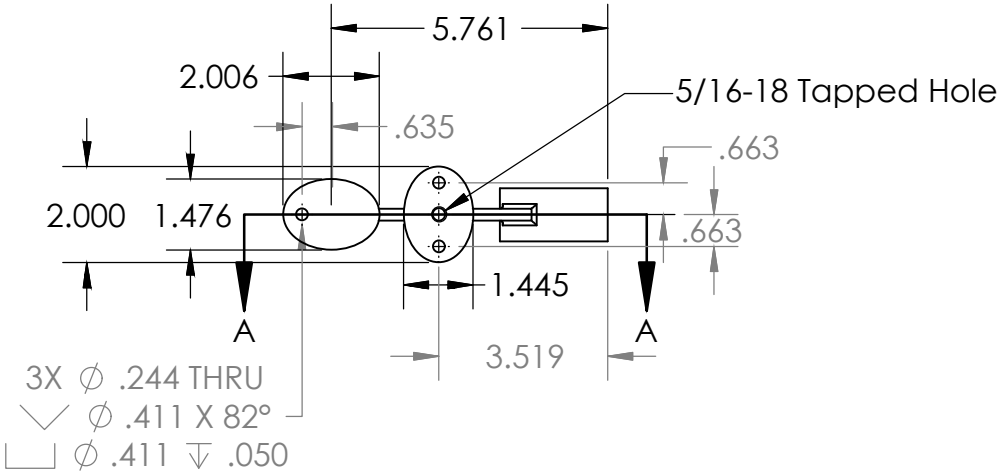

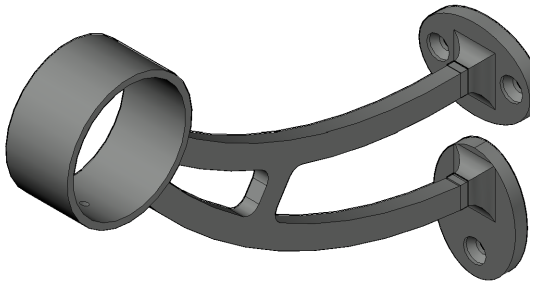

Kegworks	TITLE XX-76913-2 Bar Mount Foot Rail Bracket 2" OD		
SIZE A	MATERIAL BRASS OR STAINLESS	UNITS INCHES	PN: XX-76913-2 BAR MOUNT FOOT RAIL BRACKET 2" OD _V1	REV
SCALE 1:4	**PROPRIETARY AND CONFIDENTIAL:** THE INFORMATION CONTAINED IN THIS DRAWING IS THE SOLE PROPERTY OF KEGWORKS. ANY REPRODUCTION IN PART OR AS A WHOLE WITHOUT THE WRITTEN PERMISSION OF KEGWORKS IS PROHIBITED		SHEET 1 OF 1