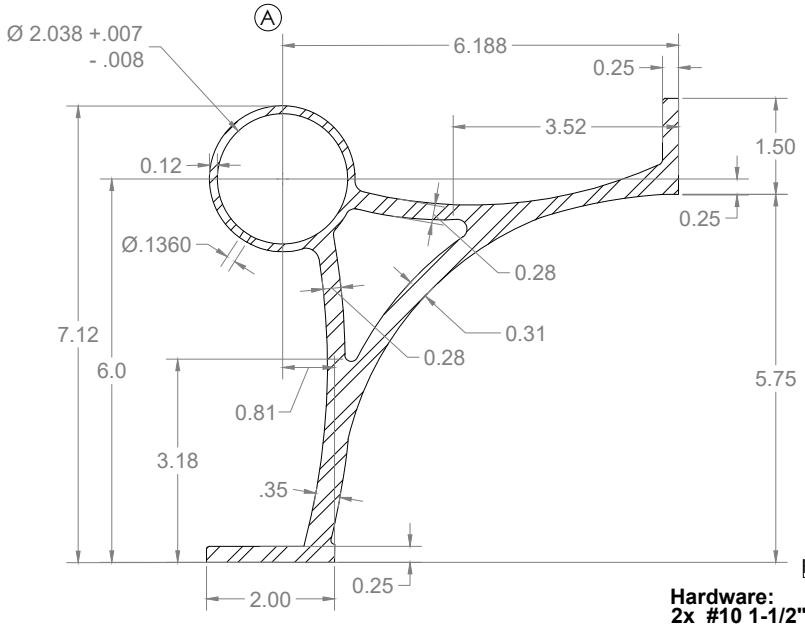

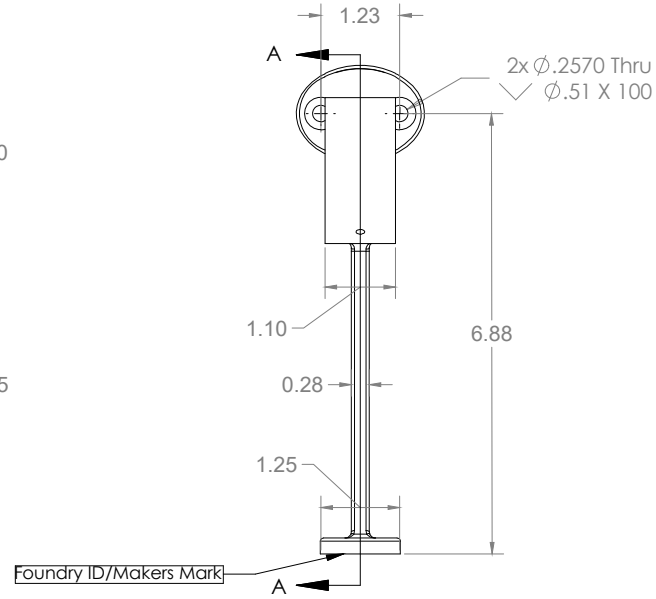

Hardware:
2x #10 1-1/2" Mounting Screws
1x #8 3/4" Self-Drilling Set Screw

Kegworks

TITLE
XX-76912-2
Combination Foot Rail Bracket
2" OD

SIZE	MATERIAL	UNITS	PN:	REV
A	BRASS OR STAINLESS	INCHES	XX-76912-2 COMBINATION FOOT RAIL BRACKET 2" OD_V1	

SCALE 1:3

PROPRIETARY AND CONFIDENTIAL: THE INFORMATION CONTAINED IN THIS DRAWING IS THE SOLE PROPERTY OF KEGWORKS. ANY REPRODUCTION IN PART OR AS A WHOLE WITHOUT THE WRITTEN PERMISSION OF KEGWORKS IS PROHIBITED

SHEET 1 OF 1